Work Order ID 50965

July 28, 2009 11:41:18 AM

Item ID: D3011-1
Revision ID: B
Item Name: Rappel

Start Date: 29/07/2009 **Start Qty:** 10.00
Required Date: 31/07/2009 **Req'd Qty:** 10.00
Reference:

09-07-28

Accept

Setup **Start**
Stop

Cust Item ID:
Customer:

Run **Start**
Stop

Approvals: **Process Plan:** _____ **Date:** _____ **Tooling:** _____ **Date:** _____
QC: _____ **Date:** _____ **SPC (Y/N):** _____ **Date:** _____

Sequence ID/ Work Center ID	Operation Description	Set Up/ Run Hours	Draw Number	Draw Rev.	Plan Code	Accept Qty	Reject Qty	Reject Number	Insp. Stamp
Draw Nbr / **Revision Nbr**									
D3011 / Rev B									
100	BAND SAW	0.00							
Bandsaw	**Memo**	0.00							
Jeaspa Bandsaw	Cut Blanks: 26.625"		Y.A	09/07/28			10		
110	HAAS CNC VERTICAL MACHINING #1	0.00							
HAAS 1	**Memo**	0.00							
HAAS CNC vertical machine #1	Machine as per folio FA129 Folio Rev: B Dwg Rev: B		Y.A	09/08/01			10		

Work Order ID 50965

July 28, 2009 11:41:19 AM

Item ID: D3011-1
Revision ID: B
Item Name: Rappel
Start Date: 29/07/2009 **Start Qty:** 10.00
Required Date: 31/07/2009 **Req'd Qty:** 10.00
Reference:

Accept

Setup Start
Stop

Cust Item ID:
Customer:

Run Start
Stop

Approvals: **Process Plan:** _____ **Date:** _____ **Tooling:** _____ **Date:** _____
QC: _____ **Date:** _____ **SPC (Y/N):** _____ **Date:** _____

Sequence ID/ Work Center ID	Operation Description	Set Up/ Run Hours	Draw Number	Draw Rev.	Plan Code	Accept Qty	Reject Qty	Reject Number	Insp. Stamp
120	QC2- Inspect parts off machine FAI/FAIB	0.00							
QC	Memo	0.00	B.A 09/08/01			10			
Quality Control									
130	QC8- Inspect parts - second check	0.00							
QC	Memo	0.00	mk 09/08/02			10			
Quality Control									
131		0.00							
Outsource2	Memo P/O: 10169	0.00				CL	09/08/05	10	
Outsource process - NDT	LPI AS PER ASTM 1417 LEVEL 2 AS PER DWG d3011								

Work Order ID 50965

July 28, 2009 11:41:19 AM

Item ID: D3011-1
Revision ID: B
Item Name: Rappel
Start Date: 29/07/2009 **Start Qty:** 10.00
Required Date: 31/07/2009 **Req'd Qty:** 10.00
Reference:

Accept

Setup **Start** **Stop**

Cust Item ID:
Customer:

Run **Start** **Stop**

Approvals: **Process Plan:** _____ **Date:** _____ **Tooling:** _____ **Date:** _____
QC: _____ **Date:** _____ **SPC (Y/N):** _____ **Date:** _____

Sequence ID/ Work Center ID	Operation Description	Set Up/ Run Hours	Draw Number	Draw Rev.	Plan Code	Accept Qty	Reject Qty	Reject Number	Insp. Stamp
132	QC5- Inspect part completeness to step on W/O	0.00				CL	09/08/05	10	
QC Quality Control	Memo	0.00							
140	Chemical Conversion Coat per QSI005 4.1	0.00							
HandFinish Hand Finishing	Memo	0.00	09-08-05			X10			
150	White Gloss(Ref:4.3.5.1) per QSI005 4.3-Alum	0.00							
Powdercoat Powder Coating	Memo START TIME: 11:40 am OVEN TEMPERATURE: 320°F FINISH TIME: 12:10pm	0.00	M112148		09-08-05	X10			

Work Order ID 50965

July 28, 2009 11:41:19 AM

Item ID: D3011-1
Revision ID: B
Item Name: Rappel

Accept

Setup Start
Stop

Start Date: 29/07/2009 **Start Qty:** 10.00
Required Date: 31/07/2009 **Req'd Qty:** 10.00
Reference:

Cust Item ID:
Customer:

Run Start
Stop

Approvals: **Process Plan:** _____ **Date:** _____ **Tooling:** _____ **Date:** _____
QC: _____ **Date:** _____ **SPC (Y/N):** _____ **Date:** _____

Sequence ID/ Work Center ID	Operation Description	Set Up/ Run Hours	Draw Number	Draw Rev.	Plan Code	Accept Qty	Reject Qty	Reject Number	Insp. Stamp
160	QC3- Inspect Part Finish	0.00							
QC	Memo	0.00							
Quality Control									
170	Identify as per dwg & Stock Location: GA	0.00							
Packaging	Memo	0.00							
Packaging									
180	QC21- Final Inspection - Work Order Release	0.00							
QC	Memo	0.00							
Quality Control									

BK 09-08-5. (10)

mf 09-08-06

05-08-11

mf 09-08-06

Picklist Print

July 28, 2009 11:41:18 AM

Work Order ID: 50965

Parent Item: D3011-1RevB

Parent Item Name: Rappel

Comments:

Start Date: 29/07/2009 **Required Date:** 31/07/2009

Start Qty: 10.00 **Required Qty:** 10.00

Component Item ID/ Item Name	Replacement Item ID	Mfg/ Purch	Bin Item	Primary Location	Last Location	Route Seq ID	Unit of Measure	Qty on Hand	Remaining Qty To Pick	Qty Issued	Date Issued	Status
D6202RevA I-Beam Extrusion		Manufactured	No			110	f	14.0000	10.0000			

Warehouse Location	Loc Qty	Loc Code
Main Warehouse		
MAT	14	
50040	14	
50630	125'	22.6666

H.A 09/07/28

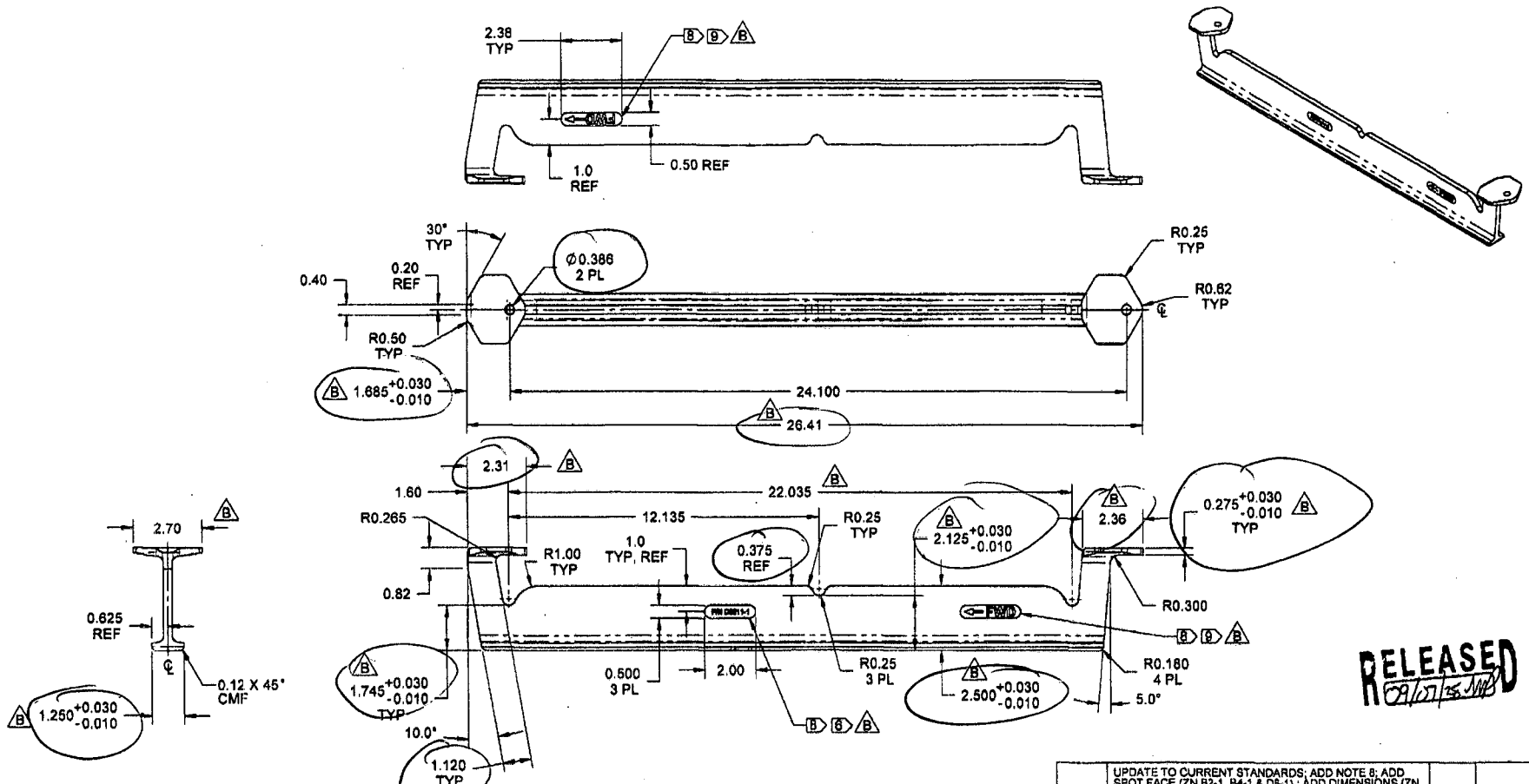

RELEASED 09/07/24

NOTES:
1) MATERIAL: MANUFACTURE FROM D6202-027 EXTRUSION
2) FINISH: ACID ETCH AND ALODINE PER DART QSI 005 4.1
POWDER COAT "WHITE" (4.3.5.1) PER DART QSI 005 4.3
3) TOLERANCES: PER DART QSI 018 UNLESS OTHERWISE NOTED
4) UNITS: INCHES UNLESS OTHERWISE NOTED
5) BREAK SHARP EDGES: 0.005 TO 0.010 MAX
6) IDENTIFICATION: ENGRAVE P/N IN THIS AREA AS SHOWN (NEAR SIDE ONLY) TO MAX DEPTH OF 0.015 IN 0.19 HIGH LETTERS WITH A MIN RADIUS TOOL OF 0.015
7) WEIGHT: 3.00 lbs
8) SPOT FACE MAX DEPTH OF 0.010 PRIOR TO MARKING
9) ENGRAVE "FWD" IN THIS AREA AS SHOWN TO MAX DEPTH OF 0.015 IN 0.38 HIGH LETTERS WITH MIN TOOL RADIUS OF 0.015
B 10) LPI PER ASTM 1417 LEVEL 2

D3011-1 RAPPEL SLIDE BAR

REV.	DESCRIPTION	BY	DATE
B	UPDATE TO CURRENT STANDARDS; ADD NOTE 8; ADD SPOT FACE (ZN B2-1, B4-1 & D5-1) ; ADD DIMENSIONS (ZN B3-1, B4-1 & C5-1); 26.41 WAS 26.32 (ZN C4-1); 2.70 WAS 2.700 (ZN B7-1); ADD (+0.030/-0.010) TOLERANCES; ADD LPI (ZN A8-1)	RF	09.07.24
A	NEW ISSUE	CP	01.03.29

DESIGN	DS	DART AEROSPACE LTD HAWKESBURY, ONTARIO, CANADA
DRAWN	RF	
CHECKED		DRAWING NO. D3011 — REV. B — SHEET 1 OF 1
MFG. APPR.		
APPROVED		TITLE: RAPPEL SLIDE BAR — SCALE: NTS
DE APPR.		
DATE	09.07.24	

DART AEROSPACE LTD	Work Order:	50965
Description: Rapped Bar.	Part Number:	3011-1
Inspection Dwg: D3011 Rev: A		Page 1 of 1

FIRST ARTICLE INSPECTION CHECKLIST

[X] First Article [ ] Prototype

Drawing Dimension	Tolerance	Actual Dimension	Accept	Reject	Method of Inspection	Comments
26.41	±.030	26.41	✓			
2.31	±.030	2.314	✓			
2.36	±.030	2.360	✓			
1.120	TYP	1.125	✓			
1.685	+.030 -.010	1.687	✓			
1.745	"	1.765	✓			
1.250	"	1.286	✓			
2.500	"	2.508	✓			
2.125	"	2.139	✓			
.275	"	.284	✓			
.375	Ref	.367	✓			
Ø.386	+.002 -.001	.387	✓			

Measured by:	SB	Audited by:	[illegible]	Prototype Approval:	N/A
Date:	09/07/31	Date:	09/08/02	Date:	N/A

Rev	Date	Change	Revised by	Approved
A		New Issue	KJ/JLM	

ACUREN

P- 14944

LIQUID PENETRANT TEST REPORT

PAGE 1 OF 1

CLIENT	DART AEROSPACE	DATE	AUG 4-2009 TIME AM ☑ PM ☐
ATTENTION	LINDA / CHANTEL	ACUREN JOB NO.	188-09-001480
ADDRESS	1270 ABERDEEN ST	PO/WO NO.	10169
	HAWKESBURY ON	WORK LOCATION	HAWKESBURY
	K6H 1K7	ACCEPTANCE STD.	ASTM 1417 REV./DATE 2007
PROJECT	F.P.I. ON MACHINED PARTS AND CROSS TUBES		
ITEM(S) EXAMINED			

JOB DESCRIPTION | PROCEDURE NO. LT0002 REV./DATE | TECHNIQUE NO. LT-~~TECH~~2 REV./DATE

PART NO. — MATERIAL S.S./ALUDINE ALUMINUM THICKNESS —

SCOPE WET FLOURESCENT LIQUID PENETRANT INSPECTION CARRIED OUT 100% EXTERNAL.

TEST DETAILS

METHOD	☑ FLUORESCENT ☐ VISIBLE		☐ WATER WASH ☐ SOLVENT REMOVABLE ☐ POST EMULSIFIED
FAMILY BRAND	MAGNAFLUX		BLACK LIGHT S/N 16459 ☐ OUTPUT > 1000 μ W/CM² ☐ AMBIENT < 2 fc
PENETRANT	ZL 67	MINIMUM DWELL TIME 45 ~~10~~ MIN.	LIGHTING EQUIP. ☐ FLASHLIGHT ☐ TROUBLELIGHT ☐ OUTPUT>100 fc @ SURFACE
PENETRANT REMOVER	H2O	MINIMUM DRY TIME >10 MIN.	OTHER LABINO
DEVELOPER	SKD 52	MINIMUM DWELL TIME 10 MIN.	LIGHT METER S/N CAL DUE DATE DEC. 8-2009.
DEVELOPER TYPE	☑ NON AQUEOUS ☐ AQUEOUS ☐ DRY		

TEST SURFACE

SURFACE CONDITION	☐ AS GROUND	☑ AS WELDED	☐ MACHINED	☐ SHOT BLASTED	☑ CLEAN BARE METAL
SURFACE TEMPERATURE	☐ < - 4°C/ 20°F	☐ - 4°C/ 20°F TO 10°C/50°F		☐ 10°C/50°F TO 52°C/125°F	☐ > 52°C/125°F

RESULTS- (☐ METRIC ☐ IMPERIAL)

ITEM	COMMENTS	ACCEPT	REJECT
W.O.	50388		
	40 MACHINED PARTS	✓	
W.O.	50965		
	10 PCS		
W.O	50966		
	10 PCS	✓	
W.O -	50796 - 1 PC	✓	
W.O -	50798 - 1 PC	✓	
W.O -	50797 - 1 PC	✓	
W.O -	50667 - 1 PC	✓	

ALL ITEMS INSPECTED WERE FOUND ACCEPTABLE

09 08 05

SIGNATURES

CLIENT REPRESENTATIVE	MATTHEW MURDOCH (PRINT)	(SIGNATURE)	DTR # E-20066.
TECHNICIAN (SIGNATURE):	MIKE JOHNSTON		REPORT REVIEWED BY:
NAME (PRINT):	1ST TECHNICIAN	2ND TECHNICIAN	NAME / INITIALS
	CGSB LEVEL II SNT LEVEL	CGSB LEVEL SNT LEVEL	
	CGSB REG. NO 60666	CGSB REG. NO	

WHITE – CLIENT COPY CANARY – OFFICE COPY PINK – TECHNICIAN COPY GOLD – OFFICE COPY